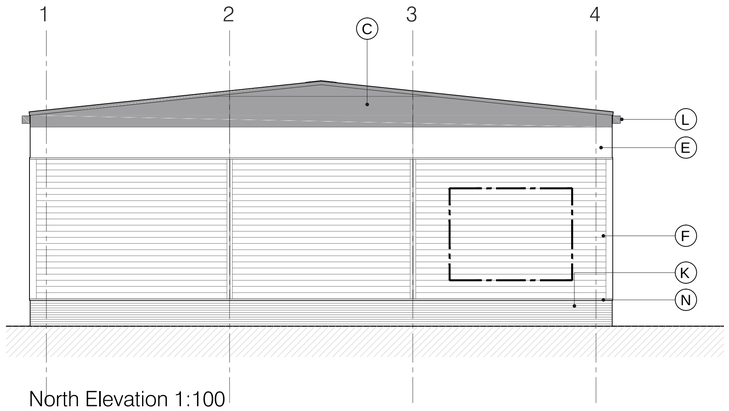

North Elevation 1:100

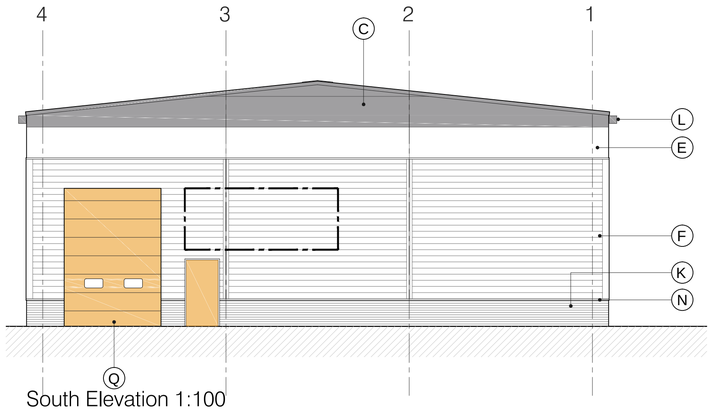

South Elevation 1:100

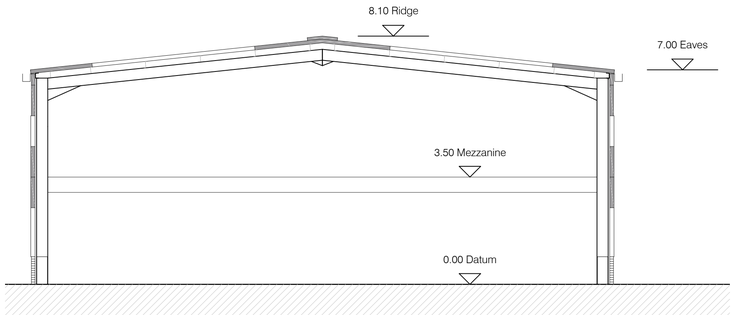

Typical Cross Section 1:100

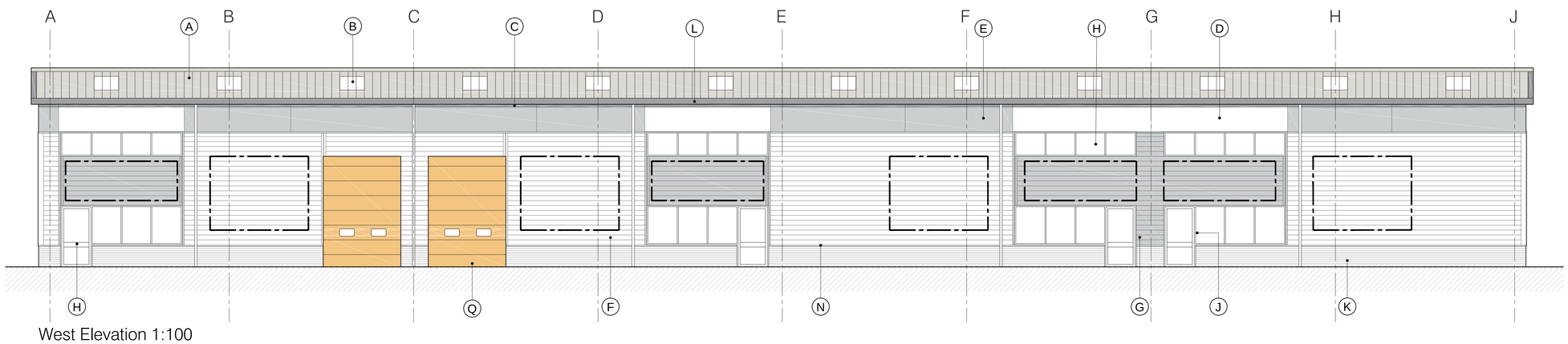

West Elevation 1:100

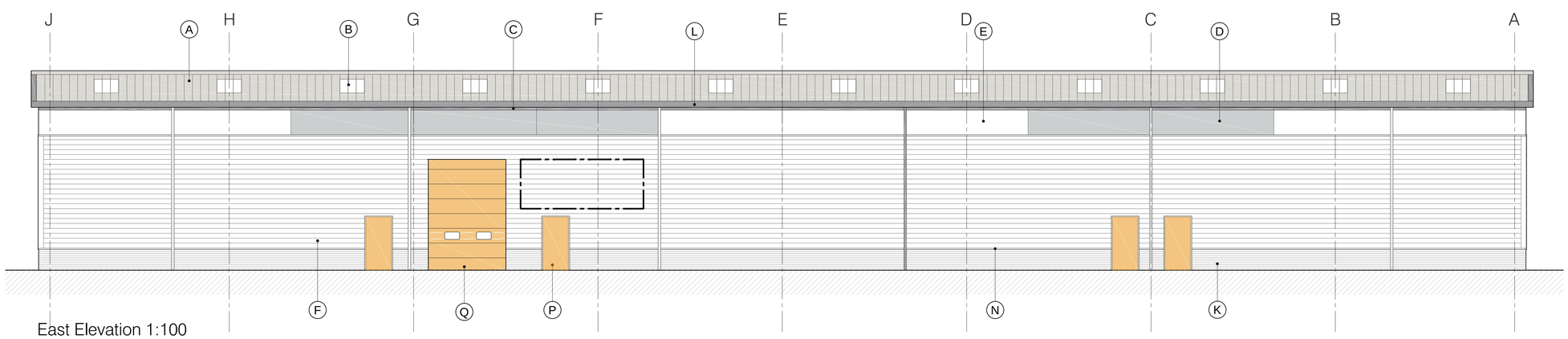

East Elevation 1:100

Notes

0 1 2 4 6 8m

Scale Bar 1:100

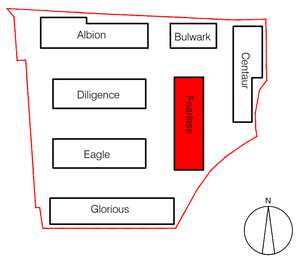

Key / Legend

A - Kingspan KS1000RW trapezoidal composite roofing sheet
Colour: Goosewing Grey (RAL 080 70 05)
B - Kingspan day-light trapezoidal multi wall polycarbonate roof light
Kingspan KS1000DLTR08
C - Kingspan 1000mm MR Cladding - Colour: Anthracite (RAL 7016)
D - Kingspan 1000mm MR Cladding - Colour: Merlin Grey (RAL 180 40 05)
E - Kingspan 1000mm MR Cladding - Colour: White (RAL 9003)
F - Kingspan 1000mm Five Crowns Profile cladding - Colour Silver Metallic (RAL 9006)
G - Kingspan 1000mm Five Crowns Profile cladding - Colour Merlin Grey (RAL 180 40 05)
H - Aluminium window and door units - Colour: Merlin Grey (RAL 180 40 05)
J - Coloured aluminium spandrel panel
K - Face brickwork - Ibstock Staffordshire Slate Blue Smooth laid in coloured dark mortar
L - Aluminium RWPs / guttering - Colour: Anthracite (RAL 7016)
N - Bottom cladding drip - Colour: Anthracite (RAL 7016)
P - Proprietary steel doorsets - Colour: Daffodil Yellow (RAL 1007)
Q - Roller shutter - Colour: Daffodil Yellow (RAL 1007)



Allocated signage zones

No	Revision	Dwn / Date	Chk / Date
C	Signage zones indicated	TG/17.11.15	AB/17.11.15
B	Variation of Condition Planning Application	TG/22.10.15	AB/22.10.15
A	PLANNING ISSUE	JSB/18.05.15	TG/18.05.15

Scaled dimensions are not to be used for construction
Contractor to check all dimensions and report omissions and errors to the Architect

Forum Architecture Ltd
Studio 52
Basepoint
Andersons Road
Southampton, Hampshire
SO14 5FE

tel: 023 8068 2095
w: forumarchitecture.co.uk
e: mail@forumarchitecture.co.uk

FORUM architecture

DRAWING TITLE
Fearless
Proposed Section and Elevations

CLIENT
Tidebank UK Ltd

PROJECT
Daedalus Park - SITE A

DRAWING NO.	REV.	DRAWING STATUS	SCALE
15002-35	C	PLANNING	1:100@A1