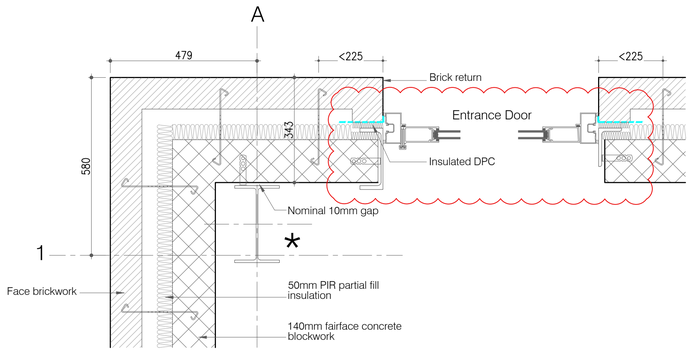

Detail 1
Corner Arrangement

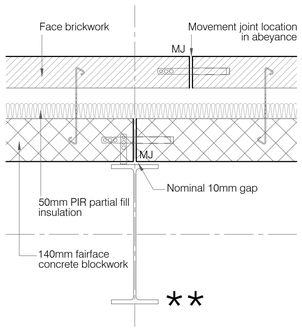

Detail 2
Typical Intermediate Column Arrangement

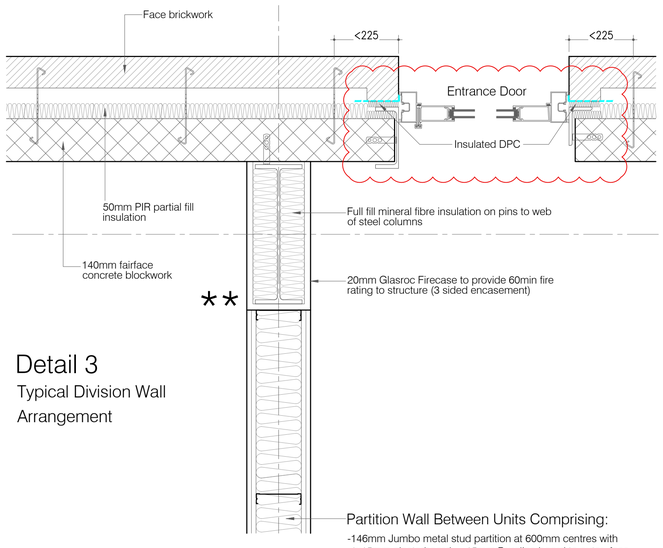

Detail 3
Typical Division Wall Arrangement

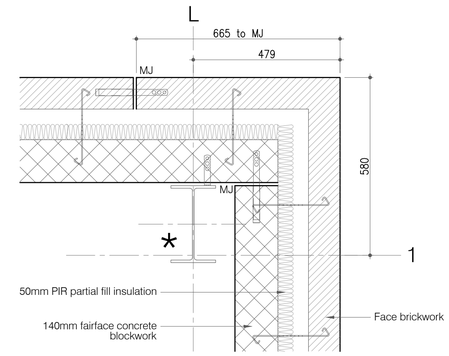

Detail 4
Corner Arrangement

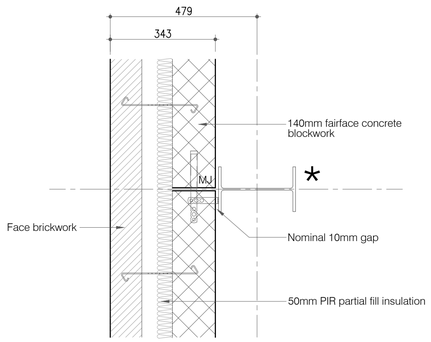

Detail 10
Typical Gable Column Arrangement

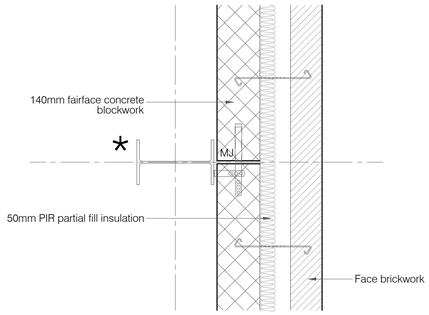

Detail 5
Typical Gable Column Arrangement

Notes
Wall ties indicated are indicative and SUBJECT TO S.E. CONFIRMATION

Wall tie specification in accordance with S.E specification and details

Refer to floor plan arrangement drawings for external and internal MJ locations

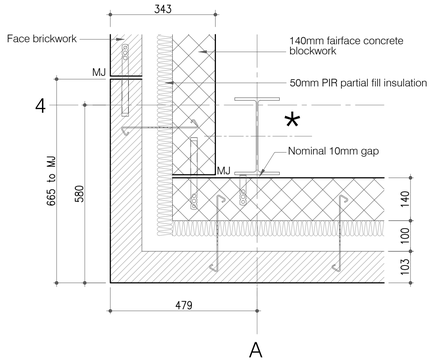

Detail 9
Corner Arrangement

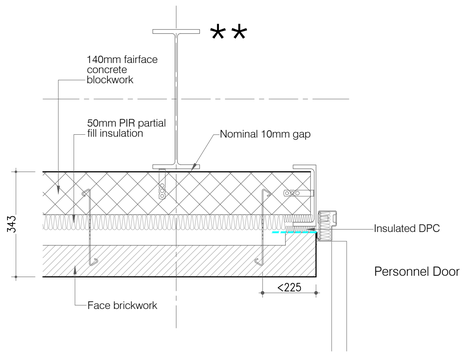

Detail 8
Typical Intermediate Column Arrangement with Personnel Door Shown

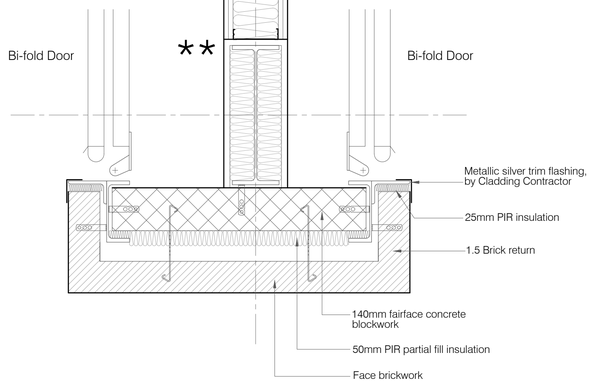

Detail 7
Typical Bi-fold Goods Door Arrangement

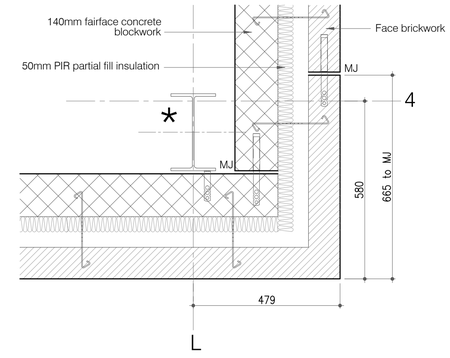

Detail 6
Corner Arrangement

Ties Legend
- Ancon RT2 stainless steel ties
- Ancon PPS stainless steel ties
- Ancon SPB stainless steel tie

Column Legend
*	UC254 x 146
**	UC457 x 152
***	UC203 x 203
****	UC406 x 140

Key Plan - Refer to Drawing 510

No	Revision	Dwn / Date	Chk / Date
P2	Ties and openings to Entrance Doors revised	PR/11.03.16	MGB/11.03.16
P1	Original Issue	PR/08.03.16	MGB/08.03.16

Scaled dimensions are not to be used for construction
Contractor to check all dimensions and report omissions and errors to the Architect

Forum Architecture Ltd
Studio 52
Basepoint
Andersons Road
Southampton, Hampshire
SO14 5FE

tel: 023 8068 2095
w: forumarchitecture.co.uk
e: mail@forumarchitecture.co.uk

FORUM architecture

DRAWING TITLE
Perimeter Column Plan Details Sheet 1

CLIENT
Mildren Construction

MILDREN CONSTRUCTION

PROJECT
Daedalus Park - Site A

DRAWING NO.	REV.	DRAWING STATUS	SCALE
15010-511	P2	PRELIMINARY	1:10@A1