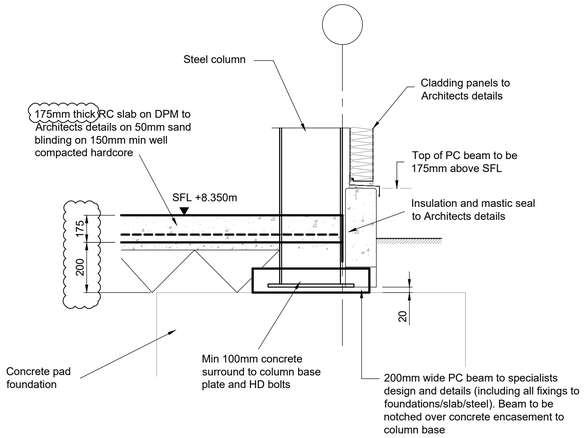


## TYPICAL EDGE SECTION

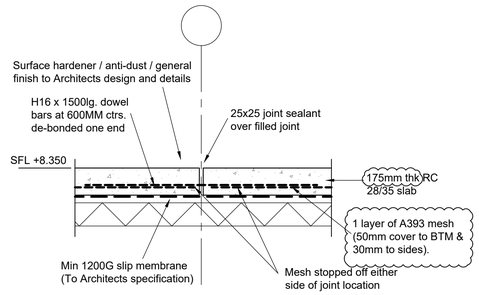


## FORMED RESTRAINED MOVEMENT JOINT

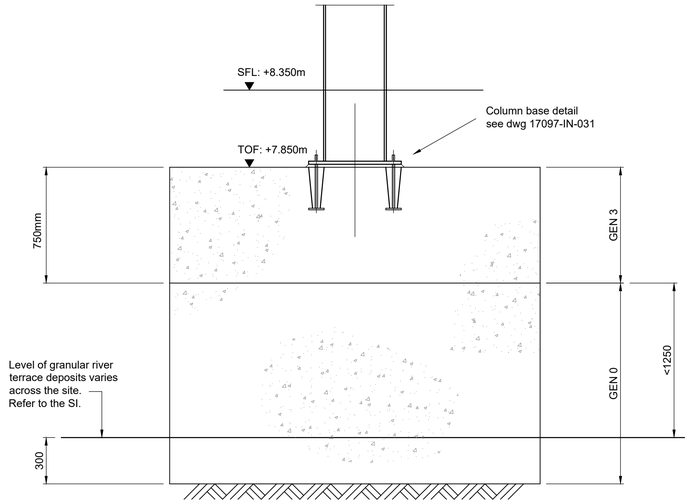


## TYPICAL FOUNDATION DETAIL

WHERE THE DEPTH FROM UNDERSIDE OF DESIGNED PAD FOUNDATION TO RIVER TERRACE DEPOSITS LAYER IS LESS THAN 1.25m

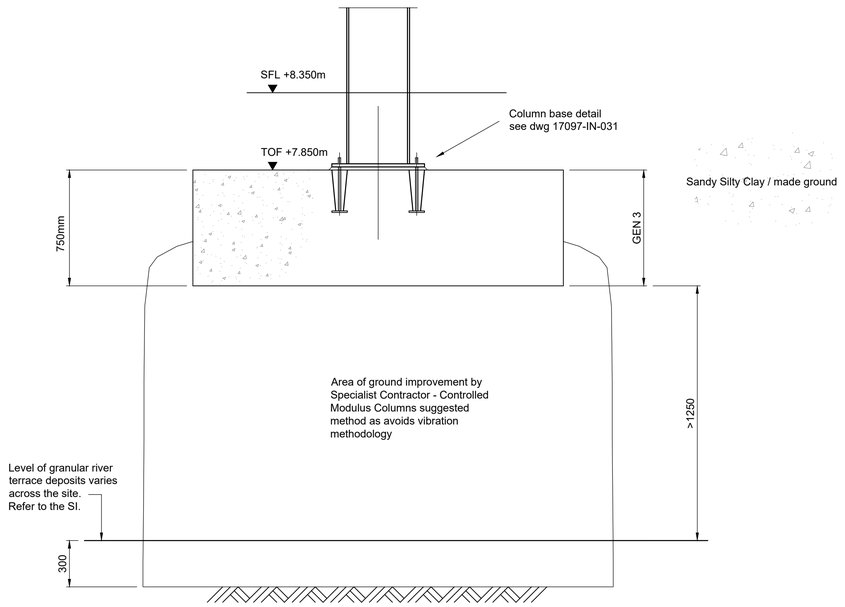


## TYPICAL FOUNDATION DETAIL

WHERE THE DEPTH FROM UNDERSIDE OF DESIGNED PAD FOUNDATION TO RIVER TERRACE DEPOSITS LAYER IS GREATER THAN 1.25m

## Notes

GENERAL.

1. This drawing is to be read in conjunction with all relevant Architects, Engineers and Specialists drawings and the Specification.
2. In case of a discrepancy between drawings or a lack of dimensions W.F.Brown Associates Limited must be consulted before work proceeds.
3. All dimensions are in millimetres.
   All levels are in metres,unless noted otherwise.

DO NOT SCALE THIS DRAWING - IF IN DOUBT ASK.

4. All work is to comply with current requirements of the building regulations and allied legislation whether referred to or not.
5. All materials should be used in compliance with the appropriate manufacturers recommendations.

| Revision | Date Revised | Revision Notes | Amended |
|---|---|---|---|
| P02 | 01/08/18 | PRELIMINARY ISSUE | RS |
| P01 | 06/07/18 | Preliminary Issue | RS |

PRELIMINARY — Suitability Code: S1

Project Name
DAEDALUS PARK
SITE B - NORTH

Architect
FORUM ARCHITECTURE

Client
TIDEBANK UK LTD

WFBA
CONSULTING CIVIL & STRUCTURAL ENGINEERS
The Old Hayloft, Pucknall Farm
Dores Lane, Braishfield, Romsey,
Hampshire, SO51 0QJ.
Tel: 01794 368241
Email: contact@wfba.co.uk www.wfba.co.uk
Certificate Number 3011

THIS DRAWING IS THE COPYRIGHT OF WFBA.
IT MUST NOT BE COPIED, ALTERED OR REPRODUCED IN ANYWAY WITHOUT THEIR AUTHORITY.

Drawing Title
INVINCIBLE and ILLUSTRIOUS GROUND FLOOR and FOUNDATION DETAILS - SHEET 2

| Created By | Checked By | Approved By |
|---|---|---|
| AD | BH | AC |

| WFBA Project Reference: | Scale | Date |
|---|---|---|
| 17097 | 1:20 @ A1 | November 2017 |

Project - Originator - Volume - Level - Type - Role - Number: 17097-WFB-IN-GF-DR-S-0021
Revision: P02