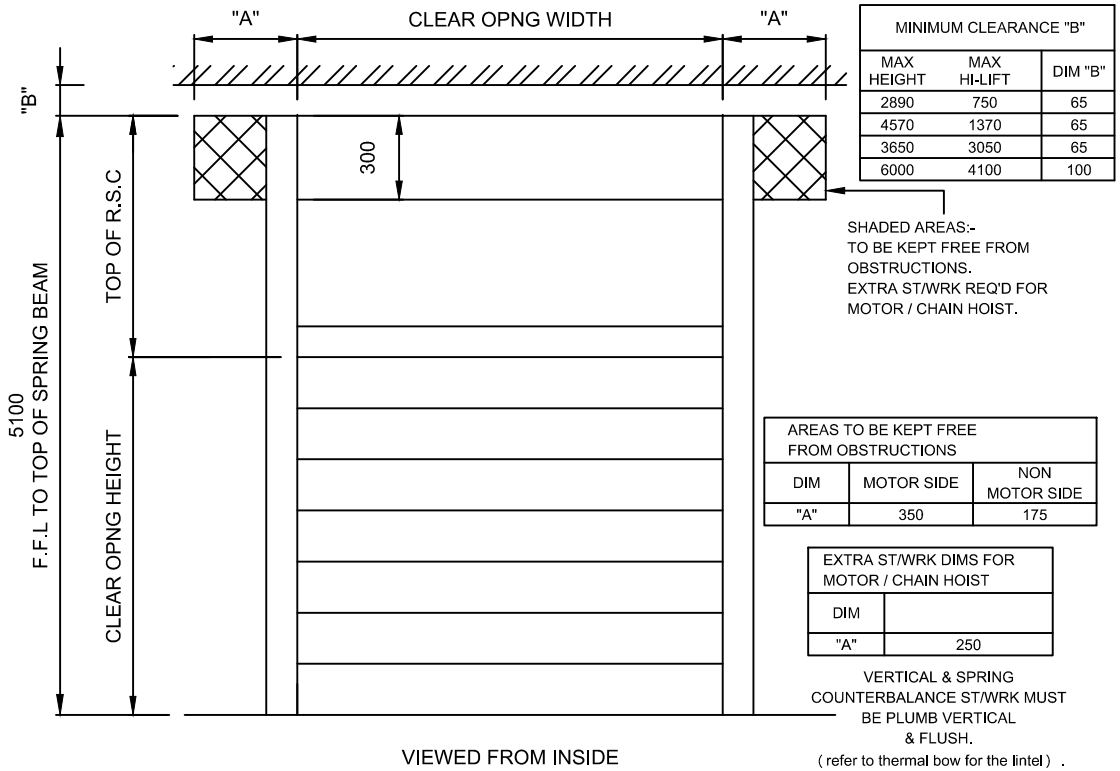

MINIMUM CLEARANCE "B"		
MAX HEIGHT	MAX HI-LIFT	DIM "B"
2890	750	65
4570	1370	65
3650	3050	65
6000	4100	100

SHADED AREAS:-
TO BE KEPT FREE FROM OBSTRUCTIONS.
EXTRA ST/WRK REQ'D FOR MOTOR / CHAIN HOIST.

AREAS TO BE KEPT FREE FROM OBSTRUCTIONS		
DIM	MOTOR SIDE	NON MOTOR SIDE
"A"	350	175

EXTRA ST/WRK DIMS FOR MOTOR / CHAIN HOIST	
DIM	
"A"	250

VERTICAL & SPRING COUNTERBALANCE ST/WRK MUST BE PLUMB VERTICAL & FLUSH.
(refer to thermal bow for the lintel) .

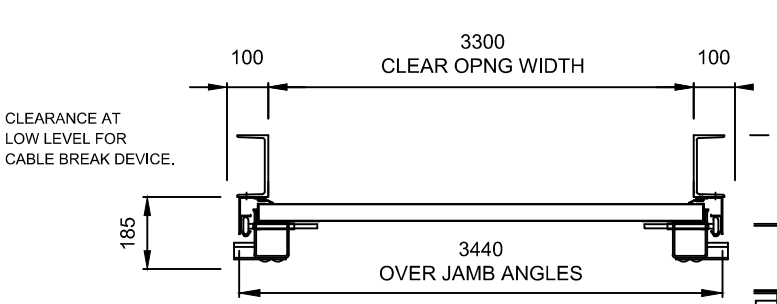

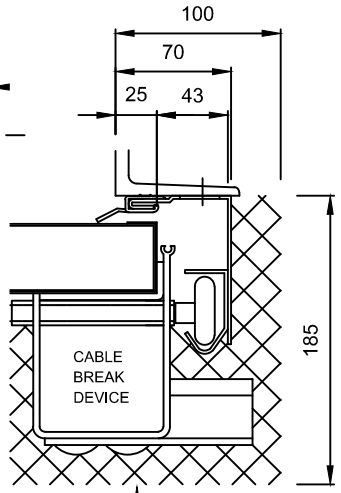

CLEARANCE AT
LOW LEVEL FOR
CABLE BREAK DEVICE.

JN 95824 / 1-16 rev C

TABLE OF ESTIMATED THERMAL BOW - INDUPART STANDARD PANEL 40MM THICK							
TEMPERATURE DIFFERENCE (°C)	SPAN (MM)						
	3000	3500	4000	4500	5000	5500	6000
-50	-17	-23	-30	-38	-47	-57	-68
"-"IVE INDICATES COLDER OUTSIDE -40	-14	-18	-24	-30	-38	-45	-54
-30	-10	-14	-18	-23	-28	-34	-41
30	10	14	18	23	28	34	41
40	14	18	24	30	38	45	54
50	17	23	30	38	47	57	68
60	20	28	36	46	56	68	81
80	27	37	48	61	75	91	108

THE TABLE DOES NOT ALLOW FOR ANY TOLERANCE OR CLEARANCE.
THE TABLE ASSUMES THERE ARE NO PANEL STIFFENERS USED.
PANEL THICKNESS IS 40MM.

THERMAL BOW SHOULD BE TAKEN INTO ACCOUNT WHEN ALLOWING FOR HEADER CLEARANCES, ESPECIALLY DARK COLOURS & WIDE SPANS.

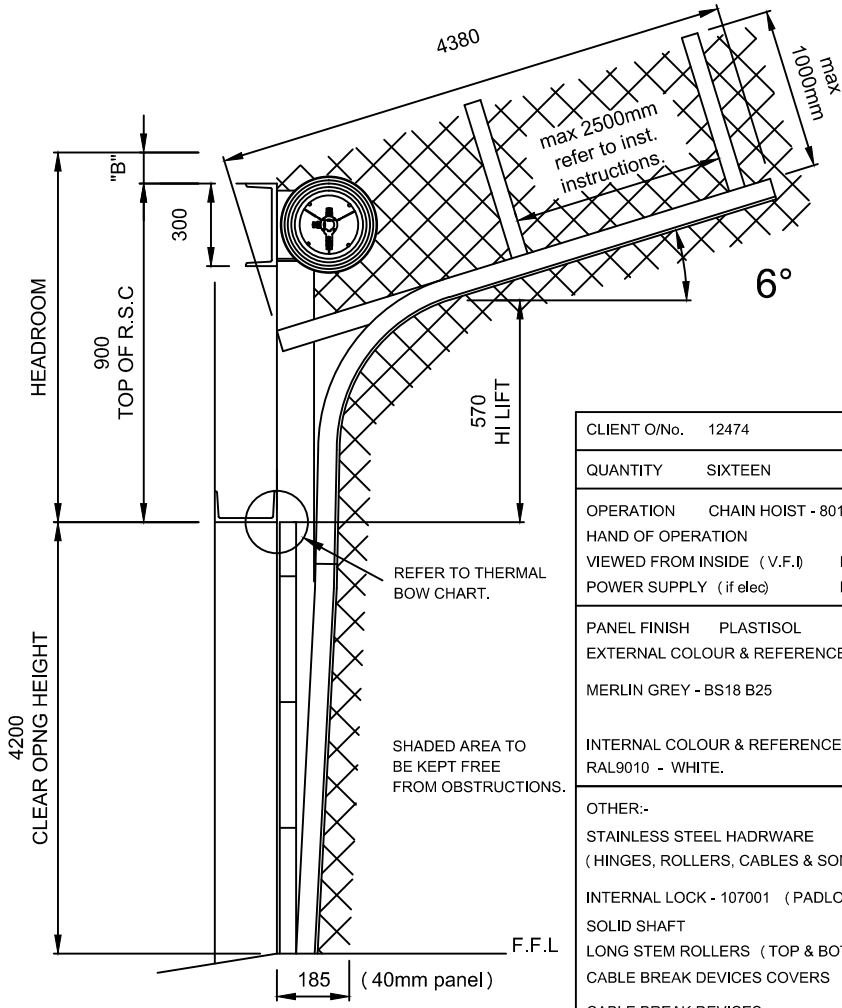

THE INTERNAL THRESHOLD SHOULD BE SMOOTH & LEVEL.
IT IS ADVISED THAT THE EXTERNAL THRESHOLD SLOPES AWAY FROM THE OPENING TO HELP PREVENT WATER INGRESS.

CLIENT O/No.	12474
QUANTITY	SIXTEEN
OPERATION	CHAIN HOIST - 801005
HAND OF OPERATION VIEWED FROM INSIDE (V.F.I)	LH / RH
POWER SUPPLY (if elec)	N/A
PANEL FINISH	PLASTISOL
EXTERNAL COLOUR & REFERENCE:-	
MERLIN GREY - BS18 B25	
INTERNAL COLOUR & REFERENCE:-	
RAL9010 - WHITE.	
OTHER:-	
STAINLESS STEEL HADRWARE (HINGES, ROLLERS, CABLES & SOME FIXINGS)	
INTERNAL LOCK - 107001 (PADLOCKABLE) .	
SOLID SHAFT	
LONG STEM ROLLERS (TOP & BOTTOM)	
CABLE BREAK DEVICES COVERS	
CABLE BREAK DEVICES	
SPRING BREAK DEVICES	

All dimensions in mm, unless specified. Tolerance + or - 5mm.
All dimensions are based on Kingspan standard 40mm thick panels & standard 51mm (2") track.

ARMASHIELD

CLIENT / SITE :
KNIGHTS BROWN CONSTRUCTION LTD
INVINCIBLE & ILLUSTRIOUS BUILDINGS

DESCRIPTION :
INSTALLATION CLEARANCES - HIGH LIFT c/w
TRACK PITCH - 40mm THICK PANEL

DATE :	23/10/18	DWG NO. INSTALL 2	REV C
DRAWN BY :		SHEET	

©indupart 2018